**Control and Cybernetics**

vol. **26** (1997) No. 2

# The Gulf War economic game

by

**Gianfranco Gambarelli and Paola Piana**

Dept. of Mathematics, Statistics, Informatics and Applications
University of Bergamo, Piazza Rosate 2, 24129 Bergamo, Italy

**Abstract:** This paper evaluates the economic a priori options of Allied intervention/non-intervention and Iraqi withdrawal/non-withdrawal from Kuwait during the Gulf War in 1991. These considerations have been developed using data from forecasts made in December 1990. The model applied is a two-person nonconstant sum game. Model and solution are short term.

**Keywords:** war, Gulf War, game theory, two-person games, non-constant sum games, reliability.

## 1. Introduction

On the 2nd of August 1990 Iraqi troops invaded Kuwait. The United Nations immediately passed a resolution regarding Iraq. Other resolutions followed together with various actions and negotiations against a background of international unrest and change. There was the split in the Arab world, improved relations between the two superpowers after the Perestroika, the conflict between Israel and bordering states, and from even further afield the involvement of the Middle East and Australia. All this was accompanied by a multitude of pacifist movements with various objectives and interests. On the 29th of November the twelfth U.N. resolution (No. 678) fixed the 15th of January 1991 as the ultimatum date for the Iraqi withdrawal from Kuwait or the U.N. would take military action. At this point the two sides had a clearer picture in front of them, each side had two possible options: war or peace. Apart from the humanitarian, political and strategical implications this decision entailed, the two sides also had to take into account short- and long-term economic consequences. In this paper we will examine the short-term implications (3 years) using the only data (actual or forecast which was updated to reflect values in the second half of 1990) available in December 1990, before the war started:

- variations in Iraqi, Kuwaiti, and Saudi Arabian income from oil production due to the embargo;
- Iraqi trade balance and debts with respect to other countries;

| Allies | Iraq | |
|---|---|---|
| | withdrawal ($W$) | non-withdrawal ($NW$) |
| non-intervention ($NI$) | $p_a(NI, W)$, $p_i(NI, W)$ | $p_a(NI, NW)$, $p_i(NI, NW)$ |
| intervention ($I$) | $p_a(I, W)$, $p_i(I, W)$ | $p_a(I, NW)$, $p_i(I, NW)$ |

Table 1. The payoff matrix of the game

- estimated costs of the war and estimated reconstruction costs for Iraq and Kuwait;
- miscellaneous data.

## 2. The model

The following abbreviations will be used. With regard to the Allied, $I$ and $NI$ indicate intervention and non intervention, respectively. Regarding Iraq, $W$ indicates the peace option (Iraqi withdrawal from Kuwait), and $NW$ indicates the war option (non-withdrawal of Iraq from Kuwait). The pair $(X, Y)$ indicates the choice of option $X$ by the Allied forces and the choice of option $Y$ by Iraq. The symbol $p_a(X, Y)$ indicates the payoff (negative or positive) for the Allied forces in relation to the pair $(X, Y)$ chosen. In the same way, the symbol $p_i(X, Y)$ indicates the payoff for Iraq. Therefore:

$p_a(NI, NW)$ indicates the payoff for the Allied forces if they do not intervene and Iraq remains in Kuwait

$p_i(NI, NW)$ indicates the payoff for Iraq in the same circumstances as above, and so on.

The model is a complete-information two-person non-constant sum game. Table 1 shows the matrix of payoffs. Note that the option $(I, W)$ (which corresponds to an Allied attack and the Iraqi withdrawal from Kuwait) is highly improbable, but has been included in the matrix for the sake of completion. The following computations will show why this option should be rejected. Also note that the model can be further developed by means of an $n$-person game involving all the single participants in the conflict, studied using the power indices (see Owen, 1995; Gambarelli, 1983 and 1994; Gambarelli and Owen, 1994). However, as we will see in Section 4, this study leads to reliable and concrete results.

## 3. Quantification of the payoffs

All monetary sums are in billions ($bn = 10^9$) of U.S. dollars.

### 3.1. Payoff for the Allied forces

$p_a(X, Y)$ is given by the algebraic sum of the following components:

| Components / Options | $(NI, W)$ | $(NI, NW)$ | $(I, W)$ | $(I, NW)$ |
|---|---|---|---|---|
| $M_a$ | 0 | 0 | -11.1 | -11.1 |
| $R_a^I$ | 0 | 0 | -200.0 | 0 |
| $R_a^K$ | 0 | 0 | -100.0 | -100.0 |
| $D_a$ | 0 | -31.0 | 0 | 0 |
| $O_a^A$ | 10.6 | 71.2 | 10.6 | 71.2 |
| $O_a^K$ | -5.7 | -38.4 | -5.7 | -38.4 |
| $p_a(X, Y)$ | 4.9 | 1.8 | -306.2 | -78.3 |

Table 2. Calculation of payments for the Allies (data are expressed in billions of dollars)

$M_a(X, Y)$ Allied military costs (assault-force building up net). This item is null and void if no Allied military action is taken ($M_a(NI, Y) = 0$). Otherwise it equals $-\$11.1bn$ (see C.I. 1991, p.601).

$R_a^I(X, Y)$ The Allies' contribution to Iraqi reconstruction costs. This item is null and void if no Allied military action is taken ($R_a^I(NI, Y) = 0$). This is also valid if the war is reciprocal ($R_a^I(I, NW) = 0$). Otherwise, it equals $-\$200bn$ (see Puletti, 1991).

$R_a^k(X, Y)$ The Allies' contribution to Kuwaiti reconstruction costs. This item is null and void if no Allied military action is taken ($R_a^k(NI, Y) = 0$). Otherwise, it equals $-\$100bn$ (see Tully, 1991; Alimi and Tuquoi, 1991).

$D_a(X, Y)$ The total sum of Iraqi debts towards Kuwait and Saudi Arabia, to be cancelled in the case of "status quo". This sum equals $D_a(NI, NW) = \$31bn$ and represents total debts incurred ($\$30bn$) and the confiscated Iraqi funds during the Kuwait invasion ($\$1bn$) (see Sassoon, 1990). In all other cases $D_a(X, Y) = 0$ as the debt remains, despite certain value factors of the market, compensated by the high potential of Iraqi oil production (see Gambarelli, 1992).

$O_a^A(X, Y)$ The increase in income from oil production of Saudi Arabia which substitutes Iraq and Kuwait production due to the embargo. This factor is expressed as $O_a^A(X, W) = \$10.6bn$ should the Iraqis withdraw thus meeting the terms of the ultimatum, otherwise $O_a^A(X, NW) = \$71.2bn$. Calculation of values $O_a^A$, $O_a^K$, $O_i^I$ and $C_i$ is explained in the Appendix.

$O_a^K(X, Y)$ The decrease in Kuwait's income from oil production during the Iraqi occupation. This factor is expressed as:

$$O_a^K(X, W) = -\$5.7bn$$

$$O_a^K(X, NW) = -\$38.4bn.$$

All the above payments are gathered in Table 2.

| Components / Options | $(NI, W)$ | $(NI, NW)$ | $(I, W)$ | $(I, NW)$ |
|---|---|---|---|---|
| $M_i$ | 0 | 0 | -2.4 | -2.4 |
| $R_i^I$ | 0 | 0 | 0 | -200.0 |
| $D_i$ | 0 | 31.0 | 0 | 0 |
| $O_i^I$ | -11.0 | -74.0 | -11.0 | -74.0 |
| $C_i$ | -1.3 | -9.0 | -1.3 | -9.0 |
| $p_i(X, Y)$ | -12.3 | -52.0 | -14.7 | -285.4 |

Table 3. Calculation of payments for Iraq (data are expressed in billions of dollars)

### 3.2. Payoff for Iraq

$p_i(X, Y)$ is given by the algebraic sum of the following components:

$M_i(X, Y)$ Iraqi military expenditure. This factor is null and void if the Allied forces take no military action, otherwise it is calculated as $-\$2.4bn$ (see Dassu, 1990).

$R_i^I(X, Y)$ Iraqi reconstruction costs borne by Iraq itself. This factor is null and void if the Allied forces take no military action ($R_i^I(NI, Y) = 0$), or the Allied forces intervene despite an Iraqi withdrawal ($R_i^I(I, W) = 0$). Otherwise it is calculated as $-\$200bn$ ($= R_a^I(X, Y)$).

$D_i(X, Y)$ The total sum of Iraqi financial debts due to Kuwait and Saudi Arabia ($= -D_a(X, Y)$).

$O_i^I(X, Y)$ The decrease in Iraqi income from oil production. This factor is calculated as:

$$O_i^I(X, W) = -\$11.0bn$$

$$O_i^I(X, NW) = -\$74.0bn.$$

$C_i(X, Y)$ The cancellation of Iraqi's trade balance, that is Iraqi's losses in terms of import-export, excluding oil. This factor is computed as:

$$C_i(X, W) = -\$1.3bn$$

$$C_i(X, NW) = -\$9.0bn.$$

All the above payments are gathered in Table 3.

There are other factors that are more difficult to quantify which could be taken into consideration: confiscation of Iraqi cultural assets during the conflict, reconstruction contracts awarded to American or European companies, etc. (see Oddo, 1991). For the sake of simplicity such parameters have been omitted in the matrix calculations but are taken into consideration in the examination of the stability of the solution.

| Allies | Iraq | |
|---|---|---|
| | withdrawal ($W$) | non-withdrawal ($NW$) |
| non-intervention ($NI$) | (4.9,-12.3) | (1.8, -52.0) |
| intervention ($I$) | (-306.2,-14.7) | (-78.3,-285.4) |

Table 4. The matrix of computed payoffs

## 4. Optimal strategies

Table 4 shows the payoffs calculated in Section 3. Note that from the Allied point of view the move of non-military action dominates the move of taking military action. So whatever move Iraq makes, the Allied payoff is always superior in the first case (being $4.9 > -306.2$ and $1.8 > -78.3$). This also applies for Iraq. The move to withdraw is preferable to that of remaining in Kuwait, whatever decision the United Nations makes (being $-12.3 > -52.0$ and $-14.7 > -285.4$). Therefore, the game has only one solution in pure strategies. This requires **no Allied intervention and Iraqi withdrawal from Kuwait**. This set of moves results in a win of $\$4.9bn$ for the Allies and limits Iraqi losses to $-\$12.3bn$. To evaluate the reliability of the solution, it is necessary to take into account both the margin of error in the components used here as well as in the components which have not been used in this model (see end of Section 3). The solution can be said to be stable as long as the evaluation errors meet the following conditions

$$p_a(I, W) < p_a(NI, W)$$

$$p_a(I, NW) < p_a(NI, NW)$$

$$p_i(NI, NW) < p_i(NI, W)$$

$$p_i(I, NW) < p_i(I, W)$$

The minimum margin of error is $\$39.7bn$ $(= p_i(NI, W) - p_i(NI, NW))$ and this indicates the reliability of the results yielded by the model.

## 5. Conclusions

The short-term (three years) optimum solution is, therefore, for each of the participants, the peace option whatever move the opponent makes. The stability of this solution has been evaluated with a margin of nearly forty billion dollars, offering a high degree of reliability. Obviously, long-term solutions involve far more complex problems in terms of international politics: the credibility of the United Nations in the light of improved relations between the superpowers

after Perestroika; Iraq's goal of becoming the centre of the Islamic world; the prestige of the two leaders involved in the conflict; the risk that Iraq would later invade Saudi Arabia and therefore exert considerable control over world oil resources, etc. Further considerations involve numerous and important humanitarian problems affecting the lives of the Iraqi, Kuwaiti, Curd, Israeli, and Palestinian soldiers and civilians. However, this does not form a part of this paper, which is limited to evaluating the short-term economic cost to be paid for long-term stability: $\$78.3bn + \$1.8bn = 80.1$ billions of U.S. dollars.

## Acknowledgements

This work has been sponsored jointly by MURST (grants 40% and 60%) and by Committee 10 of CNR. The authors would like to thank the Italian Military Academy of Revenue Inspectors for assistance and materials, as well as Manfred Holler and Noemi Rocca for useful suggestions.

## References

ALIMI, J. and TUQUOI, J.P. (1991) Qui paiera l'addition de la reconstruction? *Expansion*, **400**, March, 17-21.

BRAMS, S.J. (1985) *Superpower Games*. Yale University Press.

BRAMS, S.J. and KILGOUR, D.M. (1988) *Game Theory and National Security*. Basil, Blackwell.

C.I. (1991) *Il Commercio Internazionale*. **11**.

DASSU, M. (1990) .Le armi di Saddam. *Politica ed Economia*. **11**, 31-32.

DE BIASE, L. (1991) I Conti del Golfo, *Fortune Italia*. **2**, 18-24.

GAMBARELLI, G. (1983) Common Behaviour of Power Indices. *International Journal of Game Theory*, **12**, 4, 237-244.

GAMBARELLI, G. (1992) Strategies for the Repayment of External Debt. *Proceedings of the International Conference on Information and Systems*. Zhang Shengkai and Zou Kaiqi, eds., Dalian, China: Dalian Maritime University Publishing House, 566-573.

GAMBARELLI, G. (1994) Power indices for political and financial decision making. *Annals of Operations Research*, **51**, 165-173.

GAMBARELLI, G. and OWEN, G. (1994) Indirect control of corporations. *International Journal of Game Theory*, **23**, 4, 287-302.

MCMILLAN, J. (1986) *Game Theory in International Economics*. Harwood Academic Publishers.

ODDO, G. (1991) La ricostruzione dell' Iraq nelle mani dei consorzi. *Il Mondo Economico*, **8**, March, 23.

OWEN, G. (1995) *Game Theory*. III ed. New York: Academic Press.

PULETTI, G. (1991) Finanziatori cercansi per ricostruire due paesi. *Il Mondo Economico*, **9**, March, 25-27.

SASSOON, E. (1990) Il dittatore di Baghdad. *Il Mondo Economico*, **34**, March, 29.

SCHELLING, T.C. (1981) *The Strategy of Conflict.* Harvard University.

TULLY, S. (1991) Who will rebuild Kuwait. *Fortune International*, **6**, March, 43.

## Appendix: Calculation of quantities depending on the length of the embargo ($O_a^A$, $O_a^K$, $O_i^I$, $C_i$)

The length of the embargo is 163 days (from 6th of August 1990 to 15th of January 1991) should Iraq withdraw from Kuwait by the ultimatum date $(X, W)$, otherwise three years, i.e. 1096 days $(X, NW)$.

The first calculation regards the variation in the Iraqi trade balance $C_i$.

On the 31st of December 1989 the forecast for the end of 1990, which is our reference date, was for a surplus of $\$3bn$ (see C.I. 1991, p. 601). With reference to that date, if the U.N. sanctions were fully applied for 163 days then Iraqi losses would be:

$$C_i(X, W) = -3 \cdot 163/365 = -\$1.3bn$$

If, on the other hand, the sanctions were applied for three years, Iraqi losses would be:

$$C_i(X, NW) = -3 \cdot 3 = -\$9.0bn$$

The calculations for the variations in income from oil production ($O_a^A$, $O_a^K$, $O_i^I$) follow. Table 5 indicates how the embargo would cause a significant drop in Kuwaiti and Iraqi oil production. Other countries, especially Saudi Arabia, would increase production to make up for this decrease on the world market. The financial quantification of these variations, in the column on the right, was obtained by multiplying the difference (given in the penultimate column) between production before and after the invasion, by the price of oil per barrel ($25). These data have not been updated for long-term forecasts as they were set by OPEC. Therefore:

$$\begin{aligned}
O_a^A(X, W) &= +65.0 \cdot 163 = \$10.6bn \\
O_a^A(X, NW) &= +65.0 \cdot 1096 = \$71.2bn \\
O_a^K(X, W) &= -35.0 \cdot 163 = -\$5.7bn \\
O_a^K(X, NW) &= -35.0 \cdot 1096 = -\$38.4bn \\
O_i^I(X, W) &= -67.5 \cdot 163 = -\$11.0bn \\
O_i^I(X, NW) &= -67.5 \cdot 1096 = -\$74.0bn
\end{aligned}$$

| | Oil production in million of barrels per day | | | | Variation in daily income (= Diff · $25) |
|---|---|---|---|---|---|
| | June 1990 | August 1990 | December 1990 | Difference (December–August) | |
| Saudi Arabia | 5.4 | 5.4 | 8.0 | +2.6 | +65.0 |
| Kuwait | 1.7 | 1.5 | 0.1 | -1.4 | -35.0 |
| Iraq | 3.1 | 3.1 | 0.4 | -2.7 | -67.5 |

Table 5. Quantification of variations in the oil production income of Saudi Arabia, Iraq, and Kuwait due to the embargo (Source: De Biase, 1991)

**Control and Cybernetics**

vol. **26** (1997) No. 2

# Trade-off between energy and entropy of information

by

**Henryk Górecki**

Institute of Automatics,
Technical University of Mining and Metallurgy,
al. Mickiewicza 30, 30-059 Cracow, Poland

**Abstract:** Two ways of speed stabilization of the d-c motor are considered. One way consists in the use of additional kinetic energy accumulated in a wheel with a great inertial moment $J$. The other way consists in the use of additional information supplied by the feedback loop with gain $K$. In both cases the motor is under influence of the same white Gaussian noise. These two ways of stabilization are compared under the assumption of the same value of the speed error in the steady state.

**Keywords:** entropy of information, energy, stabilization, d-c motor, white noise

## 1. Introduction

In the paper the relation between energy and entropy of information is found. This serious problem was considered in Kolmogorov (1956;1968), McMillan (1953), Rissanen (1978), Verdugo Laro and Rathie (1978), Żurek (1989;1990), Jaynes (1957), Brillouin (1962), Bennet (1987), Axzel and Daroczy (1973), Chaitin (1987), Gray (1990), Kaczorek (1981). This relation seems to be very important from theoretical point of view and, besides, it has some practical implications for the design of electrical and hydraulical systems. The references give an idea as to where this and related problems have been considered

The speed stabilization of the direct current motor with external excitation is considered. Two ways of speed stabilization are analyzed. One way is by using a wheel with a great inertial moment $J$. The second is by the use of feedback with a static controller of gain $K$. The motor is supplied by the constant voltage $u$ and is under the influence of the white Gaussian disturbance, Kwakernaak, Sivan (1972).

The same accuracy of these two ways of stabilization is assumed.

The relation between the kinetic energy of the inertial wheel and the amount of information in the feedback is found.

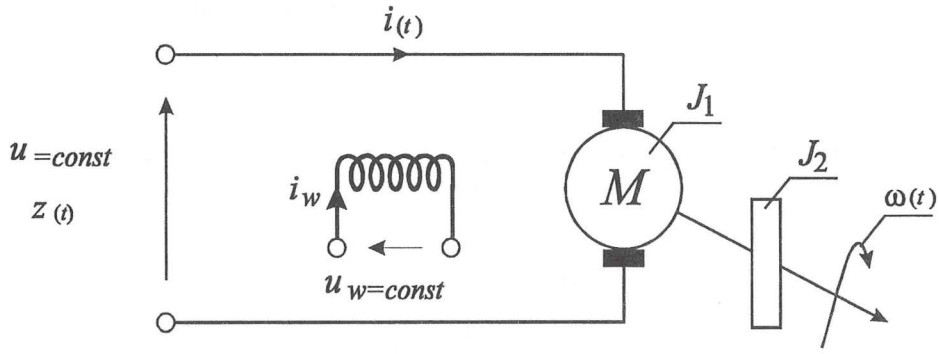


Figure 1. The scheme of the speed stabilization of the motor using inertial wheel

## 2. The two methods of stabilization

### 2.1. The first method of stabilization (using the inertial wheel)

In Fig. 1, the scheme of motor stabilization is presented. It is assumed that the current in the excitation circuit has attained its steady state.

For the sake of simplicity the nonlinear effects such as saturation, histeresis and the reaction of the winding are neglected.

The electrical moment of the motor is described by the relation

$$M_e(t) = k_1 i_w i(t) \tag{1}$$

where
$i_w$ denotes the steady state current in the excitation circuit
$i(t)$ the current in the main circuit
$k_1$ constant coefficient.

The equation of the voltage balance is

$$u + z(t) = Ri(t) + L\frac{di(t)}{dt} + e(t) \tag{2}$$

where
the voltage $u$ represents the set-value of the speed
$z(t)$ represents the white Gaussian noise; we assume farther that $z(t) = Zw(t)$, where $Z = 1$ represents intensity of this noise.
$R$ the resistance of the main circuit
$L$ the inductance of the main circuit

$$e(t) = k_2\omega(t) \tag{3}$$

voltage induced by the rotation
$\omega(t)$ angular velocity of the motor
$k_2$ constant coefficient

The equation of the moments is as follows:

$$M_{st} + (J_1 + J_2)\frac{d\omega}{dt} = k_1 i_w i(t) \tag{4}$$

where
$M_{st}$ static moment
$J_1$ the inertial moment of the moving parts of the motor
$J_2$ the inertial moment of the wheel

In the equilibrium state, if $z(t) = 0$, the angular acceleration

$$\frac{d\omega\,(t)}{dt} = 0 \tag{5}$$

and

$$\frac{di\,(t)}{dt} = 0 \tag{6}$$

The nominal value $\omega_n$ of the speed after taking into account (3) and (6) in the equation (2) is

$$\omega_n = \frac{u - i_n R}{k_2} \tag{7}$$

where
$i_n$ is the nominal value of the current in the main circuit.

After denoting

$$\Delta i(t) = i(t) - i_n \tag{8}$$

$$\Delta\omega(t) = \omega(t) - \omega_n \tag{9}$$

$\frac{L}{R} = T_0$ the electromagnetic time constant of the main circuit
$\frac{J_1 R}{i_w k_1 k_2} = T_1$ the electromechanical time constant of the motor
$\frac{J_2 R}{i_w k_1 k_2} = T_2$ the time constant of the wheel
equations (2) and (4) can be written down as follows:

$$\begin{bmatrix} \frac{d\Delta\omega(t)}{dt} \\ \frac{d\Delta i(t)}{dt} \end{bmatrix} = \begin{bmatrix} 0 & \frac{R}{k_2}\frac{1}{T_1+T_2} \\ -\frac{1}{T_0}\frac{k_2}{R} & -\frac{1}{T_0} \end{bmatrix} \begin{bmatrix} \Delta\omega(t) \\ \Delta i(t) \end{bmatrix} + \begin{bmatrix} 0 \\ \frac{1}{T_0 R} \end{bmatrix} z(t) \tag{10}$$

The total kinetic energy with inertial wheel is equal to:

$$E_2 = \frac{1}{2}(J_1 + J_2)\omega^2(t) \tag{11}$$

The kinetic energy without inertial wheel is equal to:

$$E_1 = \frac{1}{2}J_1\omega^2(t) \tag{12}$$

The additional energy of the inertial wheel supplied to the system is equal to

$$\Delta E = E_2 - E_1 = \frac{1}{2} J_2 \omega^2(t) \tag{13}$$

The increment of this energy $\Delta E$ caused by the increment of the speed $\Delta\omega$ according to relation (9) is equal to

$$\delta(\Delta E) = J_2 \omega_n \Delta\omega(t) + \frac{1}{2} J_2 \left[\Delta\omega(t)\right]^2 \tag{14}$$

or in the differential form

$$d(\Delta E) = J_2 \omega_n d\omega \tag{15}$$

Returning to the equation (10) we denote

$$A = \begin{bmatrix} 0 & \frac{R}{k_2}\frac{1}{T_1+T_2} \\ -\frac{1}{T_0}\frac{k_2}{R} & -\frac{1}{T_0} \end{bmatrix} \tag{16}$$

$$B = \begin{bmatrix} 0 \\ \frac{1}{RT_0} \end{bmatrix} \tag{17}$$

The steady state error is equal to

$$I_1 = \lim_{T\to\infty} \frac{1}{T} \left\{ \int_0^T x^T(t)\, W x(t) dt \right\} = tr\left(B^T P B\right) \tag{18}$$

where

$$x(t) = \begin{bmatrix} \Delta\omega(t) \\ \Delta i(t) \end{bmatrix} \tag{19}$$

$W$ is a symmetric nonnegative definite matrix

$$W = \begin{bmatrix} 1 & 0 \\ 0 & \frac{R^2}{k_2^2} \end{bmatrix} \tag{20}$$

and $P$ is a constant matrix which satisfies the matrix algebraic equation

$$0 = A^T P + PA + W \tag{21}$$

The assumption that the matrix $A$ is asymptotically stable guarantees that this algebraic equation has a unique solution.

The substitution of (16) and (20) into the equation (21) gives the solution for matrix $P$

$$P = \begin{bmatrix} P_{11} & P_{12} \\ P_{12} & P_{22} \end{bmatrix} \tag{22}$$

where

$$P_{11} = \frac{1}{2}T_0 + T_1 + T_2 \tag{23}$$

$$P_{12} = \frac{1}{2}\frac{R}{k_2}T_0 \tag{24}$$

$$P_{22} = \frac{1}{2}\frac{R^2}{k_2^2}T_0\left(1 + \frac{T_0}{T_1 + T_2}\right) \tag{25}$$

The steady state error according to (18) after the substitution of (17) and (23)-(25) is equal to

$$I_1 = \frac{1}{2k_2^2}\left(\frac{1}{T_0} + \frac{1}{T_1 + T_2}\right) \tag{26}$$

### 2.2. The second method of stabilization

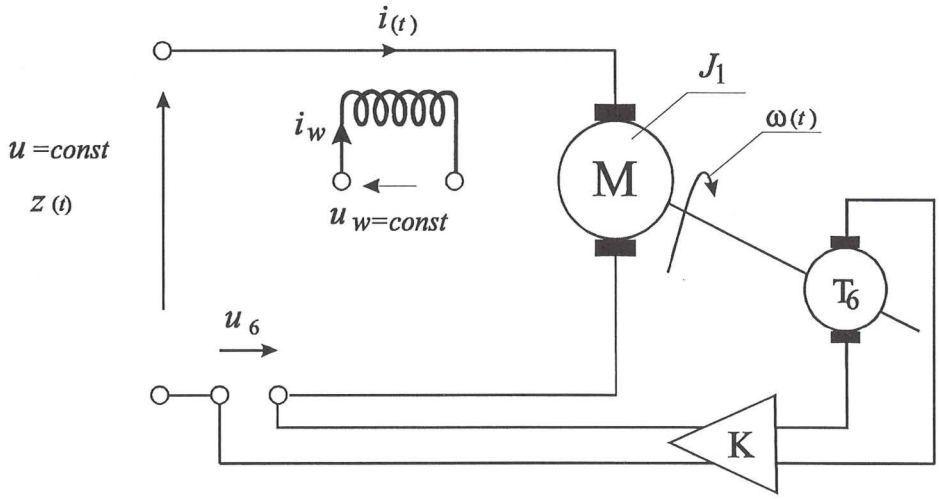


Figure 2. The scheme of speed stabilization of the motor using feedback loop

In Fig. 2 the scheme of stabilization of the speed of the motor using a tachometer $T_G$ and the gain $K$ in the feedback loop is presented.

The equations of motion are the following:

$$M_e(t) = k_1 i_w i(t)$$

$$u + z(t) = Ri(t) + L\frac{di(t)}{dt} + e(t) + u_G(t) \tag{27}$$

where

$u_G(t)$ the voltage from tachometer

$$u_G(t) = K\Delta\omega(t) \tag{28}$$

The equation of moments

$$M_{st} + J_1 \frac{d\omega(t)}{dt} = k_1 i_w i(t) \tag{29}$$

Following the same way as in the first method of stabilization we obtain a matrix equation corresponding to the matrix equation (10):

$$\begin{bmatrix} \frac{d\Delta\omega(t)}{dt} \\ \frac{d\Delta i(t)}{dt} \end{bmatrix} = \begin{bmatrix} 0 & \frac{1}{T_1}\frac{R}{k_2} \\ -\frac{k_2+K}{RT_0} & -\frac{1}{T_0} \end{bmatrix} \begin{bmatrix} \Delta\omega(t) \\ \Delta i(t) \end{bmatrix} + \begin{bmatrix} 0 \\ \frac{1}{T_0 R} \end{bmatrix} z \tag{30}$$

The solution of the corresponding Lyapunov equation gives the steady state error equal to

$$I_2 = \frac{1}{2k_2^2}\left(\frac{1}{T_0} + \frac{k_2}{(k_2+K)\,T_1}\right) \tag{31}$$

These two systems of stabilization are equivalent if the steady state errors are the same

$$I_1 = I_2 \tag{32}$$

Comparing (26) with (31) gives

$$T_2 = \frac{K}{k_2} T_1 \tag{33}$$

or

$$J_2 = \frac{K}{k_2} J_1 \tag{34}$$

The substitution of the relation (33) into (14) yields

$$K J_1 = \frac{k_2 \delta(\Delta E)}{\omega_n \Delta\omega + \frac{1}{2}\left[\Delta\omega\right]^2} \tag{35}$$

or in a differential form

$$K J_1 = \frac{k_2}{\omega_n} \frac{d\Delta E}{d\omega} \tag{36}$$

The increment of entropy of information in the system with the second method of stabilization is, Kolmogorov (1968):

$$\Delta H = H_2 - H_1 \tag{37}$$

where

$H_2$ denotes the entropy of information of the system with feedback
$H_1$ denotes the entropy of information of the system without feedback

The entropy of information for a continuous system is

$$H(p) = -\int_{-\infty}^{\infty} p(x)\ln[p(x)]dx \tag{38}$$

where $p(x)$ is the density of the probability distribution.

In this case

$$p(x) = \frac{1}{\sigma\sqrt{2\pi}}e^{-\frac{(x-m)^2}{2\sigma^2}} \tag{39}$$

where $m$ is the expected value, and $\sigma$ the dispersion or standard deviation.

The substitution of the expression (39) into (38) gives

$$H = \left[\frac{\ln\sigma\sqrt{2\pi}}{\sigma\sqrt{2\pi}}\int_{-\infty}^{\infty} e^{-\frac{(x-m)^2}{2\sigma^2}}dx + \frac{1}{\sigma\sqrt{2\pi}}\int_{-\infty}^{\infty}\frac{(x-m)^2}{2\sigma^2}e^{-\frac{(x-m)^2}{2\sigma^2}}dx\right] \tag{40}$$

Putting $\frac{x-m}{\sigma\sqrt{2}} = t$ in (40) gives

$$H = \left[\frac{\ln\sigma\sqrt{2\pi}}{\sqrt{\pi}}\int_{-\infty}^{\infty} e^{-t^2}dt + \frac{1}{\sqrt{\pi}}\int_{-\infty}^{\infty} t^2e^{-t^2}dt\right] \tag{41}$$

But

$$\left.\begin{aligned} &\tfrac{1}{\sqrt{\pi}}\int\limits_{-\infty}^{\infty} e^{-t^2}dt = 1 \\ &\tfrac{1}{\sqrt{\pi}}\int\limits_{-\infty}^{\infty} t^2e^{-t^2}dt = \tfrac{1}{2} \end{aligned}\right\} \tag{42}$$

as the integrals of Euler-Poisson.

Finally

$$H = \ln\sigma\sqrt{2\pi} + \frac{1}{2} \tag{43}$$

Returning to (37) gives

$$\Delta H = \ln\sigma_2\sqrt{2\pi} - \ln\sigma_1\sqrt{2\pi} = \ln\frac{\sigma_2}{\sigma_1} \tag{44}$$

The steady state variance matrix $Q$ is the solution of the following algebraic equation

$$AQ + QA^T + BzB^T = 0 \tag{45}$$

The solution of this equation in the case of the state equation (30) is

$$Q = \begin{bmatrix} q_{11} & 0 \\ 0 & q_{22} \end{bmatrix} \tag{46}$$

where

$$q_{11} = \frac{1}{2k_2T_1(k_2+K)} = \sigma_2^2 \tag{47}$$

$$q_{22} = \frac{1}{2R^2T_0} = \sigma_0^2 \tag{48}$$

In the case of the system without feedback loop ($K = 0$) we have

$$q_{11} = \frac{1}{2k_2^2T_1} = \sigma_1^2 \tag{49}$$

$$q_{22} = \frac{1}{2R^2T_0} = \sigma_0^2 \tag{50}$$

From the equation (44) after using (47) and (48) we find that

$$\Delta H_1 = \ln\frac{\sigma_2}{\sigma_1} = -\ln\sqrt{1+\frac{K}{k_2}} \tag{51}$$

$$\Delta H_2 = \ln\frac{\sigma_0}{\sigma_0} = 0 \tag{52}$$

We can rewrite the equation (51) in the form

$$1+\frac{K}{k_2} = e^{-2\Delta H_1} \tag{53}$$

The substitution of the relation (53) into (35) gives

$$\left(e^{-2\Delta H_1}-1\right)J_1 = \frac{\delta(\Delta E)}{\omega_n\Delta\omega+\frac{1}{2}(\Delta\omega)^2} \tag{54}$$

After denoting the kinetic energy of the system without any stabilization in the nominal state by

$$E_1 = \frac{1}{2}J_1\omega_n^2 \tag{55}$$

and after introducing relative variables

$$\Delta E_r = \frac{\Delta E}{E_1} \tag{56}$$

$$\Delta\omega_r = \frac{\Delta\omega}{\omega_n} \tag{57}$$

the relation (54) takes the form

$$e^{-2\Delta H_1} = 1+\frac{1}{2}\frac{\delta(\Delta E_r)}{\Delta\omega_r+\frac{1}{2}\left[\Delta\omega_r\right]^2} \tag{58}$$

or in the differential form

$$e^{-2\Delta H_1} = 1+\frac{1}{2}\frac{d\Delta E_r}{d\omega_r} \tag{59}$$

which is the basic relation.

## 3. Conclusion

The relation (59) leads to the following fundamental statement:

The increment of information or decrement of entropy of information in the system is proportional to the logarithm of the derivative of the additional energy supplied to the system with respect to its carrier. Observe that if the $\frac{d\Delta E_r}{d\omega_r} = 0$ then $\Delta H$ is also equal to zero, and vice-versa, if $\Delta H = 0$ then $\frac{d\Delta E_r}{d\omega_r} = 0$.

**Remark** Generalization for multivariable systems, Kaczorek (1981).

The formal generalization is straightforward, Kwakernaak, Sivan (1972).

The analogon of equation (10), the equation of motion, is the stochastic vector differential equation.

$$\begin{aligned} \dot{x}(t) &= Ax(t) + Bz(t) \\ x(t_0) &= x_0 \end{aligned} \tag{60}$$

where

$A$ and $B$ are constant matrices.

$z(t)$ is a vector of white noise Gaussian stochastic process with constant intensity $Z$.

Then if $A$ is asymptotically stable and $t_0 \to -\infty$ or $t \to \infty$ the variance matrix of $x(t)$ tends to the constant nonnegative-definite matrix.

The analogy to relations (18), (26) and (31) is as follows.

Vector of steady-state error is equal

$$\lim_{T\to\infty} \frac{1}{T} \left\{ \int_0^T x^T(t) R x(t) dt \right\} = tr\left(B^T P B\right) \tag{61}$$

where

$R$ is a symmetric nonnegative-definite constant matrix

$\bar{P}$ is a constant matrix, which is a unique solution of the Lyapunov equation

$$A^T \bar{P} + \bar{P} A + R = 0 \tag{62}$$

The vector probability density function can be written in the analogy to relation (39) as

$$p_x\left(x_1, x, ..., x_n\right) = \\ = \frac{1}{\left[\sqrt{(2\pi)^n \det C_x}\right]^{1/2}} \exp\left\{ \frac{1}{2} \frac{\det \begin{bmatrix} C_x & x - m_x \\ (x - m_x)^T & 0 \end{bmatrix}}{\det C_x} \right\} \tag{63}$$

where $C_x$ is the compound covariance matrix

$$C_x = \left[\begin{array}{cc|c} C_{x_1x_1} & C_{x_1x_2} & C_{x_1x_n} \\ C_{x_2x_1} & C_{x_2x_2} & C_{x_2x_n} \\ \hline C_{x_nx_1} & C_{x_nx_2} & C_{x_nx_n} \end{array}\right] \tag{64}$$

$$x - m_x = \begin{bmatrix} x_1 - mx_1 \\ x_2 - mx_2 \\ \dots \\ x_n - mx_n \end{bmatrix} \tag{65}$$

If the components $x_1, \dots x_n$ of the stochastic vector $x$ are not correlated, then the vector probability density function is equal

$$p_x(x_1, x_2, \dots, x_n) = p_{x_1}(x_1)p_{x_2}(x_2)...p_{x_n}(x_n) \tag{66}$$

and

$$p_{x_i}(x_i) = \frac{1}{\sqrt{2\pi C_{x_ix_i}}} \exp\left[-\frac{1}{2}\frac{(x_i - m_{x_i})^2}{C_{x_ix_i}}\right] \tag{67}$$

The subsequent calculations follow the same way as for scalar case.

## References


AXZEL, J. and DAROCZY, Z. (1973) *On Measures of information and Their Characterization.* Academic Press, New York.

BENNET, C.H. (1987) Demons, Engines and the Second Law. *Scientific American*, **259**, 5, 108-116.

BRILLOUIN, L. (1962) *Science and Information Theory.* Academic Press, New York.

CHAITIN, G.J. (1987) *Algorithmic Information Theory.* Cambridge University Press, Cambridge.

GRAY, R.H. (1990) *Entropy and Information Theory.* Springer-Verlag, New York.

JAYNES, E.T. (1970) Information theory and statistical mechanics. *Phys. Rev.*, **106**, 620-630.

KACZOREK, T. (1981) *Teoria Sterowania*, **II**, (*Control Theory, II; in Polish*), Warszawa, PWN, 487-496.

KOLMOGOROV, A.N. (1956) On the Shannon theory of information transmission in the case of continuous signals. *IRE Trans. Inform. Theory*, **IT-2**, 102-108.

KOLMOGOROV, A.N. (1968) Logical basis for information theory and probability theory. *IEEE Trans. Inform. Theory*, **IT-14**, 662-664.

KWAKERNAAK, H., SIVAN, R. (1972) *Linear Optimal Control Systems.* John Wiley & Sons, New York.

McMillan, B. (1953) The basic theorems of information theory. *Ann. Math. Stat.*, **24**, 196-219.

Rissanen, J. (1978) Modelling by shortest data description. *Automatica*, **14**, 465-471.

Verdugo Laro, A.C.G. and Rathie, P.N. (1978) On the entropy of continuous probability distributions. *IEEE Trans. Inform. Theory*, **IT-24**, 120-122.

Żurek, W.H. (1989) Thermodynamic cost of computation algorithmic complexity and the information metric. *Nature*, **314**, 119-124.

Żurek, W.H. (1990) Complexity, Entropy and the Physics of Information. *Proceedings of the 1988 Workshop on the Complexity Entropy and Physics of Information.* Addison-Wesley, Reading, MA.