Control and Cybernetics

vol. **32** (2003) No. 1

A novel approach for the optimal control of autonomous underwater vehicles

by

Sang-Bin Yim and Jun-Ho Oh

Machine Control Laboratory
Department of Mechanical Engineering
Korea Advanced Institute of Science and Technology
Kusong-dong, YusungGu, Taejeon 305-701, South Korea
E-mail: sog@ohzlab.kaist.ac.kr or gnovia@hanmail.net
E-mail: junhoh@ohzlab.kaist.ac.k

Abstract: The SDRE (State-Dependent Riccati Equation) is a technique recently proposed as a nonlinear control method. Despite the benefits due to its flexibility, the SDRE places high demand on the computational load of real-time applications, which is one of its most significant drawbacks. This paper discusses a new nonlinear feedback controller for autonomous underwater vehicles (AUVs), which eventually converges to a conventional SDRE-based optimal controller. The proposed controller is derived by direct forward integration of an SDRE. This enables fast computation, and so is applicable to real-time applications. For a state-dependent system, the proposed controller may be an alternative candidate to a conventional SDRE-based optimal controller if the system is slow-varying to different states. To cope with fast-varying systems, we introduced a deviation index, which indicates the extent of deviation of the proposed controller from the solution of a conventional SDRE-based one. Whenever the index exceeds a designated bound, the controller is initialized to the conventional SDRE optimal value. Using the deviation index, a designer can achieve a compromise between computation time and optimality. We applied the proposed controller to a numerical model of an AUV called ODIN (Choi et al., 1995), a well-known nonlinear, relatively higher order, and slow-varying system. The global position/attitude regulation, tracking problems, and fault tolerance properties were examined in the simulation to show the effectiveness of the proposed controller.

Keywords: SDRE, optimal control, AUV.

1. Introduction

The SDRE technique is growing increasingly popular in design of nonlinear opti-

1998). SDRE solutions approximate dynamic programming in the local sense, and they are robust, stable, and converge to an optimal control solution (Langson and Alleyne, 1997, Mracek and Cloutier, 1998). In spite of its systematics, flexibility, and on-line implementation properties, the SDRE's high computational burden means that it is inadequate for real-time applications. Because of this latter property, we have developed a modified SDRE controller and applied it to the well-known AUV called ODIN, which has been developed at the University of Hawaii (Choi et al., 1995).

Recently, numerous reports have emerged on using AUVs arising from the needs of the scientific, economic, and biological communities, and their dynamics and control methods have became important issues. However, the highly nonlinear time-varying dynamic behavior of these systems and the large disturbances from the driving environment are severe limitations to the adoption of traditional control theories. As a result, the control of AUVs requires advanced controller design. Yoerger and Slotine (1990) proposed a sliding mode control method for the robust tracking problem of AUVs, and Healey et al. (1993) and Rodrigues et al. (1996) have applied this method to the autonomous diving and steering motion of an AUV. Most articles treating sliding mode control method with AUVs have assumed reduced models for the various types of motion to enable easy implementation. Yuh (1994) and Ishii et al. (1998) have studied neural network control of AUVs, and Yuh (1995) has also presented a much simpler adaptation mechanism. Antonelli et al. (1999) presented experimental results on the application of the adaptive control method. Recently, Antonelli et al. (2001) have also introduced a new adaptive mechanism, which simultaneously considers an earth-fixed frame and a vehicle-fixed frame. One of the difficulties faced by the adaptive control technique is that the number of the parameters that need to be estimated quickly increases with the system order. Serrani and Zanoli (1998) and Fjellstad and Fossen (1994) have utilized nonlinear control, which combines a traditional PID controller with feedforward-like nonlinear terms. Katebi and Grimble (1999) have carried out research into an integrated control for an AUV. Boskovic and Krstic (1999) have also introduced a nonlinear controller based on Lyapunov theory, which achieves stabilization but not optimality. A nonlinear optimal control design problem for keeping station control was presented as an approximate numerical solution of the Hamilton-Jacobi-Bellman (HJB) equation by McLain and Beard (1998). However, they could not establish sufficient conditions for the selection of the basis functions. Park et al. (2000) discussed an optimal PID controller based on the nonlinear controller. The resultant controller was revealed to be the linear PID controller, which lost the benefits of the nonlinear controller of Mracek and Cloutier (1998).

Set against this background, we propose a new fast nonlinear state feedback controller, which eventually converges to a conventional SDRE-based optimal control mechanism. The global stability of our proposed method is commented by Lyapunov theory. Our controller is nonlinear and feasible, as it is a simple

however, its optimality is degraded in a fast-varying system. We introduce a deviation index, which indicates the extent of deviation of the proposed controller from a conventional SDRE-based optimal controller. By using the index, a designer can achieve a compromise between computation time and optimality. The method will be applicable to the highly nonlinear, slow-varying, and model-varying properties of AUVs.

A conventional SDRE-based optimal control architecture is introduced in Section 2, and the stability and various properties of the proposed controller are discussed. Section 3 introduces the dynamics and driving modes of the ODIN AUV, and Section 4 discusses the numerical simulation results of the proposed SDRE and their application to the AUV. Additional comments and proposals for further work are discussed in the final section.

2. Controller design and properties

For an input-affine nonlinear system with $f(0) = 0$, we can always find a continuous matrix valued function, $A(x)$, that has the following state-dependent linear representation

$$\begin{aligned} \dot{x} &= f(x) + g(x)u \\ &= A(x)x + B(x)u \end{aligned} \tag{1}$$

where $f(0) = 0$ and $g(x) \neq 0$ for all x in a compact set, $f(x) \in \mathbf{C}^k, g(x) \in \mathbf{C}^k where k \geq 1$.

The choice of $A(x)$ is not unique, and this influences the performance of the resultant SDRE controller. The goal of optimal control is to minimize an optimal cost function given by

$$J = \int_t^\infty \frac{1}{2}(x^T Q(x)x + u^T R(x)u)d\tau \tag{2}$$

with respect to the state x and control input u. Here, $x \in \mathbf{R}^n$, $u \in \mathbf{R}^m$ and $Q(x) \in \mathbf{C}^k$, $R(x) \in \mathbf{C}^k$, $k \geq 1$ are analytic matrix valued functions with $\forall x \in \mathbf{R}^n$. We let the following assumptions hold (Langson and Alleyne, 1999) for $\forall x \in \mathbf{R}^n$ in a compact set:

(A1) $Q(x) = C^T(x)C(x) > 0$ and $R(x) = R^T(x) > 0$;
(A2) $A(x)$ and $B(x)$ are analytic matrix valued functions;
(A3) $\{C(x), A(x)\}/\{A(x), B(x)\}$ are uniformly observable/controllable;
(A4) The full-state measurement vector is available;
(A5) There exists a control and a trajectory pair, $[u(t), x(t)]t \in [0, \infty)$, satisfying (1) for which the cost function (2) is finite.

The conventional SDRE optimal solution of (1)–(2) (Mracek and Cloutier, 1998) is

$$\dot{L}(\tau) = -A(x)^T L(\tau) - L(\tau)A(x) - Q(x) + L(\tau)B(x)R(x)^{-1}B(x)^T L(\tau)$$
$$L(\infty) = L_f > 0. \tag{3}$$

The state dependence of the solution of the SDRE has been neglected for simplicity. With assumptions (A1)–(A5), the above differential Riccati equation has a unique, locally asymptotically stable solution, and this can be derived from the following algebraic Riccati equation:

$$0 = -A(x)^T L(x) - L(x)A(x) - Q(x)$$
$$+ L(x)B(x)R(x)^{-1}B(x)^T L(x), \quad \forall x \in \mathbf{R}^n.$$

In the above equation, the optimal control input needs to be calculated over the entire sampling time about fixed states, x. This burden on solving the Riccati equation severely limits real-time applications (Mracek and Cloutier, 1998, Langson and Alleyne, 1999). There have been a few approaches to overcome such a shortcoming using SDRE-based optimal control (Langson and Alleyne, 1999). We now propose a new fast, nonlinear feedback control solution that eventually converges to a conventional SDRE optimal solution, and this enables a fast on-line application with easy implementation. The controller is derived by direct forward integration of a modified SDRE. The exponential convergence property of the SDRE (Callier et al., 1994) at each control point suggests that the proposed controller has nearly the same suboptimality when the system is slow-varying. To successfully deal with a fast-varying system, we need to introduce some form of control strategy.

2.1. Comments on the stability

First, we introduce various properties of the proposed controller. Let the control input and the corresponding proposed SDRE be given by

$$u(t) = -R(x)^{-1}B^T P(t)x$$
$$\dot{P}(\tau) = A(x)^T P(\tau) + P(\tau)A(x) + Q(x) - P(\tau)B(x)R(x)^{-1}B(x)^T P(\tau)$$
$$P(0) = P_0 > 0, \quad 0 \le \tau \le t. \tag{4}$$

The derivative of the proposed SDRE is the negative of (3), and its integration is forward from $\tau = 0$. By intuition, these imply that the forward integration of (4) will converge to the same value as that of the backward integration of (3), as time tends to infinity. At each time step, when the control action is given, the solution of the proposed SDRE is on an exponentially converging trajectory to the corresponding conventional SDRE solution that is extracted with fixed at the given time. When there is measurement noise on finite points, the solution of the conventional SDRE is transparent to noise and shows rapid variation. As the solution of the proposed SDRE is given by integration, the integral property attenuates and smoothens the solution at the noisy measurements. In addition, we discuss the following stability property of the closed loop

LEMMA 1 *Take Equation (4) as the state feedback controller for System (1). If there exist $P(x,t)$ and $Q(x,t)$ such that $0 < \overline{\alpha} I \leq P(x,t) \leq \overline{\beta} I < \infty \; \forall t \in [0,\infty)$ and $\breve{P}(x,t) > -Q(x)$ in a compact set, x, where $\breve{P}_{ij} = \frac{\partial P_{ij}}{\partial x}\dot{x}$ is the i,j^{th} element of $\breve{P}(x,t)$, then the closed loop system is globally stable.*

Proof. Let $V = x^T P^{-1} x$, $\sigma_1 \|x\|^2 < V < \sigma_2 \|x\|^2$

$$\begin{aligned}
\dot{V} &= x^T P^{-1}(A(x)^T - B(x)R(x)^{-1}B(x)^T P)x \\
&-x^T P^{-1}(\breve{P} + A(x)^T P + PA(x) - PB(x)R(x)^{-1}B(x)^T P + Q(x))P^{-1}x \\
&+x^T(A(x) - B(x)R(x)^{-1}B(x)P)P^{-1}x \qquad (5) \\
&= -x^T P^{-1}(\breve{P} + PB(x)R(x)^{-1}B(x)^T P + Q(x))P^{-1}x \\
&\leq -x^T P^{-1}(\breve{P} + Q(x))P^{-1}x \leq -\sigma < 0,
\end{aligned}$$

■

As $\breve{P}(x,t)$ is not an explicit function of x, then the design of $Q(x)$ depends on the experimental data. At the Pseudo Steady State (PSS), $\breve{P}(x,t)$ naturally enters into the bound of $Q(x)$. The existence of an SDRE-stabilizing feedback controller was discussed in the work of Shamma and Cloutier (2001). The solution of the proposed SDRE P values should be positive definite, and have bounded $\forall x \in \mathbf{R}^n$ in a compact set. The positivity and boundedness of P is proven in the following sequence of theorems. There has been some previous work that has proven the boundness of P. A system is said to be uniformly controllable by the following definition and lemma (Silverman and Anderson, 1968).

DEFINITION 1 *The controllability pair $[A(x(t)), B(x(t))]$ is uniformly controllable if the following holds for all $t \in [0,\infty)$, and for all x in a compact set:*

$$\begin{aligned}
&0 < \alpha I < \mathbf{I}(t) < \beta I < \infty \\
&\textit{where } \mathbf{I}(t) = \textstyle\int_{t-\delta}^{t} \Psi(x(t),t,\tau)B(x(t),\tau)B^T(x(t),\tau)\Psi^T(x(t),t,\tau)d\tau.
\end{aligned} \qquad (6)$$

The open loop state transition matrix of System (1) is given by $\Psi(x(t),t,\tau)$. There is another expression for the uniform controllability.

LEMMA 2 *A bounded realization of Equation (1) is uniformly controllable, if and only if there exists $\delta_c > 0$ such that for every state, $\xi \in \mathbf{R}^n$, at any time, t, there exists an input, u, defined on $(t-\delta_c, t)$ such that if $x(t-\delta_c) = 0$, then $x(t) = \delta$ and $\|u(\tau)\| \leq \gamma(\delta_c, \|\xi\|)$ for all $\tau \in (t-\delta_c, t)$ and for all $t \in [0,\infty)$. Where γ is the bounded function, which depends on δ_c and $\|\xi\|$.*

Proof. See Silverman and Anderson (1968).

If an open loop system is uniformly controllable, then its closed loop system

LEMMA 3 *If the pair $[A(x(t)), B(x(t))]$ is uniformly controllable, then the pair $[A(x(t)) - B(x(t))\hat{K}(x(t)), B(x(t))]$ is uniformly controllable with a bounded $\widehat{K}$ for all $t \in [0, \infty)$ and x in a compact set.*

Proof. From the assumptions in System (1), $f(x)$ is smooth and analytic for $\forall x \in \mathbf{R}^n$. Then

$$\text{span}\{f_1(x), f_2(x), \cdots, f_n(x)\} = \mathbf{R}^n, \quad \forall x(t) \quad f_i\text{'s columns of } f.$$

Further, there exists a smooth function, $\Psi(x(t), t, \tau)$, which has local diffeomorphism (onto its image) in the neighborhood of $x(t)$, such that the following hold

$$\begin{aligned} &\frac{\partial \Psi(x(\tau), \tau, t-\delta)}{\partial \tau} = A(x(\tau))\Psi(x(\tau), \tau, t-\delta) \\ &\Psi(x(\tau), \tau-\delta, t-\delta) = I \\ &\Psi(x(\tau), \tau, t-\delta) = \Psi^{-1}(x(\tau), t-\delta, \tau), \quad t-\delta \le \tau \le t. \end{aligned} \tag{7}$$

The uniform controllability of the system is given by Lemma 2. We then consider controllability of the closed loop system, which is the special case described by Silverman and Anderson (1968). Let the classes of a uniformly controllable system be described by the auxiliary input $u_1 = \widehat{K}(x)x + v$, where v is the input to the closed loop system. From Assumption (A3), we may choose a bounded matrix $\widehat{K}$ that stabilizes the closed loop system at every time such that.

$$\begin{aligned} &u_1 = \widehat{K}(x)x + v \\ &\dot{x} = (A(x) + B(x)\widehat{K}(x))x + B(x)v \\ &\|v(\tau)\| \le \|u_1(\tau)\| + \|\widehat{K}(x)\| \int_{t-\delta}^{t} \|\Psi(x(s), s, t-\delta)B(x(s))u_1(s)\| ds \\ &\le \gamma_1(\delta, \|\xi\|), \end{aligned} \tag{8}$$

where $\Psi(x, t)$ is smooth and bounded for all $t \in [0, \infty)$ and compact set x. And the bounded function γ_1 depends on δ_c and $\|\xi\|$. This is demonstrated by Lemma 2, and implies that the controllability grammian of the closed loop system is bounded by Definition 1. This result assists the following theorem.

THEOREM 1 *If the pair $[A(x), B(x)]$ is uniformly controllable, then the solution of the proposed SDRE is bounded for all $t \in [0, \infty)$ and a compact set x,*

$$0 < \overline{\alpha} I \le P(t) \le \overline{\beta} I < \infty.$$

Proof. Consider a reshaped Riccati equation

$$\begin{aligned} &\dot{P}(\tau) = (A(x) - B(x)K(\tau))^T P(\tau) + P(\tau)(A(x) - B(x)K(\tau)) \\ &+Q(x) + K(\tau)R(x)^{-1}K(\tau)\tau \ge 0 \\ &K(\tau) = R(x)^{-1}B(x)P(\tau) \end{aligned} \tag{9}$$

Using Assumption A3, we can always find a constant matrix $\widehat{K}$ such that $A(x) - B(x)\widehat{K}$ is stable in the vicinity of the current state x. Let $\widehat{P}$ be the solution of the above Riccati equation with $K(\tau) = \widehat{K}$. Then, from Wonham (1968), the solution of the original Riccati equation, (4), is bounded with the solution $\widehat{P}$ such that $P(\tau) \leq \widehat{P}(\tau)$. In the same way as Wonham (1968), the closed loop system will be

$$\begin{aligned}
&\frac{\partial \overline{\Psi}(x(\tau), \tau, t-\delta)}{\partial \tau} = (A(x(\tau)) - B(x(\tau))\widehat{K}(\tau))\overline{\Psi}(x(\tau), \tau, t-\delta) \\
&\overline{\Psi}(x(\tau), \tau-\delta, t-\delta) = I, t-\delta \leq \tau \leq t \\
&\widehat{P}(t) = \overline{\Psi}(x(t), t, t-\delta)^T \widehat{P}_{t-\delta} \overline{\Psi}(x(t), t, t-\delta) \\
&+ \int_{t-\delta}^{t} \overline{\Psi}(x(t), \tau, t-\delta)^T \{Q(\tau) + \widehat{K}(\tau)^T R(x(t))^{-1} \widehat{K}(\tau)\} \overline{\Psi}(x(t), \tau, t-\delta) d\tau.
\end{aligned} \tag{10}$$

Since $Q(x(\tau))$, $W(x(\tau))$ are positive and bounded, the second term of (10), the controllability grammian of the closed loop system, is positively bounded from the uniform controllability (Lemma 3), and the Volterra equation has a unique integrable solution, $\widehat{P}$, in the vicinity of the current state, which can be found by successive approximation. Along with the following results of Wonham (1968), we can see that the solution of the proposed SDRE is positively bounded. With the positive and bounded property of the solution of the proposed SDRE, the stability proof (Lemma 1) is completed.

2.2. Properties at the PSS

Consider the following exponential properties of the solution of the Riccati equation.

COROLLARY 1 *Convergence to P_+ for all $P_0 > 0$: $\Delta P(t) = P(t) - P_+$ exponentially converges to 0 as $t \to \infty$ for each $P_0 = P_0^T > 0$ if Assumptions (A1) and (A3) hold. Here, P_+ is the unique symmetric positive semi-definite solution that is stabilizing, i.e., such that in a closed loop system $A_+ = A - WP_+$ is exponentially stable.*

Proof. From Theorem 3 of Callier et al. (1994). Hence, we have the final theorem for the proposed controller.

Intuitively, in the case of a time-invariant system, we found that the proposed controller converges to the optimal control value. We must then consider the state for a dependent nonlinear system. The solution of the proposed SDRE is given by

$$\begin{aligned}
&\dot{P}(\tau) = A^T P(\tau) + P(\tau)A - P(\tau)WP(\tau) + Q \\
&\text{where } A = A(x(\tau)), W = B(x(\tau))R(x(\tau))^{-1}B(x(\tau))^T, Q = Q(x(\tau)) \\
&P(t) = \int^t \dot{P}(\tau) d\tau
\end{aligned} \tag{11}$$

Its deviation from the conventional SDRE is exploited by the following reshaped Riccati equation given by

$$\begin{aligned}
&\dot{P}(\tau) = A_0^T P(\tau) + P(\tau)A_0 - P(\tau)W_0 P(\tau) + Q_0 \\
&+ \widetilde{A}P(\tau) + P(\tau)\widetilde{A} - P(\tau)\widetilde{W}P(\tau) + \widetilde{Q} \\
&\text{where } \widetilde{A} = A - A_0,\ \widetilde{W} = W - W_0,\ \widetilde{Q} = Q - Q_0
\end{aligned} \tag{12}$$

Also $x(\tau) \to x(t)$, $A \to A_0$, $Q \to Q_0$, $W \to W_0$, as $\tau \to t$. As the state goes into invariant sets at the PSS, then the SDRE behaves like a time-invariant system.

THEOREM 2 *If Assumptions (A1)-(A5) hold, then the solution of the proposed SDRE eventually converges to the conventional SDRE-based optimal solution,*

$$P(x(t), t) \to L(x(t)) \text{ as } t \to \infty.$$

Proof. At the PSS, the system behaves like a time-invariant system (Rusnak, 1998).

$$\frac{\partial x}{\partial t} \cong 0 \text{ and } \widetilde{A} \cong 0,\ \widetilde{W} \cong 0,\ \widetilde{Q} \cong 0.$$

The given SDRE has the time-invariant form at PSS,

$$\begin{aligned}
&\dot{P}(\tau) \cong A_0^T P(\tau) + P(\tau)A_0 - P(\tau)W_0 P(\tau) + Q_0, \\
&P_0 = P(\tau_s),\ 0 \ll \tau_s \leq \tau < t.
\end{aligned} \tag{13}$$

From Theorem 1, the initial value, $P(\tau_s)$, is positively bounded, and the resultant solution exponentially moves to the time-invariant trajectory. Thus, there exists a bounded solution, $P(t) > 0$, by Corollary 1 such that the solution exponentially converges to $L(x(t))$ as $v \to \infty$. ■

2.3. As a suboptimal controller

From Corollary 1, the solution of the proposed SDRE approaches exponentially the solution of the conventional SDRE at each time step. When a system is slow-varying, the proposed solution can be a good approximation to the conventional SDRE solution. If the system is varying too fast to follow its optimal value, then we introduce a control strategy so that the solution may be changed and initialized by the conventional SDRE solution. In this case, there is the question of the extent of deviation of the given solution from the conventional SDRE solution. The following describes the details of the answer. We assume that cost function, J of (2) has a local optimal solution, $V(x)$. Then, for this local optimality, the Hamilton-Jacob-Bellman equation enables the following relationship (Hayase et al., 2000)

$$0 = \min_u \left\{ \frac{1}{2}(u^T R(x)u + x^T Q(x)x) + \left(\frac{\partial V}{\partial x}\right)^T (A(x)x + B(x)u) \right\}. \tag{14}$$

where l min is the local optimality. The complete square form of (14) is

$$\begin{aligned} 0 = l\min \tfrac{1}{2}\{&[u + R(x)^{-1}B(x)^T V_x]^T R(x)[u + R(x)^{-1}B(x)^T V_x] \\ &-[V_x^T B(x)R(x)^{-1}B(x)^T V_x + x^T A(x)^T V_x + V_x^T A(x)x - x^T Q(x)x]\} \end{aligned} \tag{15}$$

where $V_x = \partial V/\partial x$.

If we take $V_x = L(x)x$ with a symmetric matrix, $L(x) \in \mathbf{R}^{n\times n}$, then (15) becomes

$$\begin{aligned} 0 = l\min \frac{1}{2}\{&[u + R(x)^{-1}B(x)^T L(x)x]^T R(x)[u + R(x)^{-1}B(x)^T L(x)x] \\ &- x^T[L(x)B(x)R(x)^{-1}B(x)^T L(x) - A(x)^T L(x) - L(x)A(x) - Q(x)]x\}. \end{aligned} \tag{16}$$

This is the usual approach that a conventional SDRE controller is induced to follow. From equation (16) we obtain the following local optimal control related to the conventional SDRE. If there exists a positive definite solution, $L(x)$, for $\forall x \in \mathbf{R}^n$ in a compact set of the following conventional SDRE

$$L(x)B(x)R(x)^{-1}B(x)^T L(x) - A(x)^T L(x) - L(x)A(x) - Q(x) = 0,$$

then $u = -R(x)^{-1}B(x)^T L(x)x$ is a local optimal control law, and the resultant closed loop system, $\dot{x} = [A(x) - B(x)R(x)^{-1}B(x)^T L(x))]x$, is locally asymptotically stable. Here we define a deviation index with the following value

$$\begin{aligned} H = &[u + R(x)^{-1}B(x)^T V_x]^T R(x)[u + R(x)^{-1}B(x)^T V_x] \\ &-[V_x^T B(x)R(x)^{-1}B(x)^T V_x - x^T A(x)^T V_x - V_x^T A(x)x - x^T Q(x)x]. \end{aligned} \tag{17}$$

If the conventional SDRE control input, $V_x = L(x)x$, is given at each time step, then the deviation index will maintain a zero value over the entire time domain. The proposed controller, however, is not able to drive the index to zero. This is easily seen from the following relation. Given $V_x = P(x)x$ and $u = -R(x)^{-1}B(x)^T P(x)x$, where $P(x)$ is the positive definite solution of the proposed SDRE,

$$\dot{P}(x) = A(x)^T P(x) + P(x)A(x) - P(x)B(x)R(x)^{-1}B(x)^T P(x) + Q(x).$$

The deviation index is reduced into

$$\begin{aligned} H &= -x^T[P(x)B(x)R(x)^{-1}B(x)^T P(x) - A(x)^T P(x) - P(x)A(x) - Q(x)]x \\ &= x^T \dot{P} x. \end{aligned} \tag{18}$$

The monotonic and exponential property of P to the conventional SDRE solution, L, implies that $x^T \dot{P} x$ can be chosen as a deviation index from optimality. If we set a bound, Δ, to H such that if $H > \Delta$ then we switch the integral solution, P, with conventional SDRE solution, L, and replace the initial value of the integral with L, then the designer can plan the bound Δ to obtain a compromise between optimality and computational load. As mentioned in Sections 1 and 2, a slow-varying system can take the bound as being a relatively

The slowly varying dynamics may be explained through mathematical treatment. The solution of the conventional SDRE $L(x)$ (3) is reduced into an algebraic Riccati equation and it does not depend on the current time t. But the solution of the proposed SDRE $P = P(x,t)$ is dependent on both the current time and current state. Time derivatives of each solution are $\frac{dL}{dt} = \breve{L} + \frac{\partial L}{\partial t} = \breve{L}$ and $\frac{dP}{dt} = \breve{P} + \frac{\partial P}{\partial t}$ where $\breve{\oplus}_{ij} = \frac{\partial \oplus_{ij}}{\partial x}\dot{x}$ is the $(i,j)^{\text{th}}$ element of $\breve{\oplus}(x)$. A slowly varying system would be a system in which the proposed SDRE does not deviate significantly from the conventional SDRE solution, such that $\frac{dL}{dt} \approx \frac{dP}{dt}$ over the entire horizon. Intuitively at the near steady state, $\frac{\partial P}{\partial t} \approx 0$, resulting in slowly varying dynamics.

3. Dynamics and driving modes of an AUV

We investigated the dynamics of an AUV, which are given from ODIN (Podder and Sarkar, 1999) as

$$M\dot{\omega} + \Gamma(\omega)\omega + D(\omega)\omega + G(q) = \mathrm{T},$$

where $q \in \Re^6$ are the generalized coordinates containing the position $(\widetilde{x}, \widetilde{y}, \widetilde{z})$ and the orientation $(\widetilde{\phi}, \widetilde{\theta}, \widetilde{\psi})$ of the AUV with reference to the inertial frame, and $\omega \in \Re^6$ are the linear and angular velocities of the AUV on the vehicle's body-attached frame. The vector, $\mathrm{T} \in \Re^6$, is the vector of generalized forces on the AUV, which is operated by eight thrusters. The inertia matrix of the AUV, $M \in \Re^{6\times 6}$, includes both the rigid body and the added mass terms. The matrix of the centrifugal and Coriolis forces is given by $\Gamma \in \Re^{6\times 6}$, and $D \in \Re^{6\times 6}$ and $G \in \Re^6$ are the drag forces and restoring forces, respectively.

The linear and angular velocities of the inertial frame are related with those of the body-attached frame by the following linear transformation

$$\dot{q} = \aleph(q)\omega$$

where $\aleph(q) \in \Re^{6\times 6}$ is the transformation matrix. With the above relationship, the dynamic equation of the system, based on the inertial frame is given by

$$\begin{aligned}
\ddot{q} &= \dot{\aleph}(q)\omega + \aleph(q)\dot{\omega} \\
&= \dot{\aleph}(q)\aleph(q)^{-1}\dot{q} + \aleph(q)M^{-1}(-\Gamma(\omega)\aleph(q)^{-1}\dot{q} - D(\omega)\aleph(q)^{-1}\dot{q} - G(q) + \mathrm{T}) \\
&= \Pi\dot{q} + \overline{\aleph}F_t + \aleph(q)M^{-1}G(q) \qquad (19) \\
\omega &= \aleph(q)^{-1}\dot{q}, \mathrm{T} = EF_t
\end{aligned}$$

Here, $\Pi = \aleph(q)\aleph(q)^{-1} + \aleph(q)M^{-1}(-\Gamma(\omega)\aleph(q)^{-1} - D(\omega)\aleph(q)^{-1})$, $\overline{\aleph} = \aleph(q)M^{-1}E$, $E \in \Re^{6\times 8}$ is the thruster configuration matrix, and $F_t \in \Re^{8\times 1}$ is the vector of the thruster forces. The resultant state equation is

$$\begin{bmatrix} \dot{q} \\ \dot{\omega} \end{bmatrix} = \begin{bmatrix} 0 & I \\ [illegible] & [illegible] \end{bmatrix} \begin{bmatrix} q \\ \omega \end{bmatrix} + \begin{bmatrix} 0 \\ [illegible] \end{bmatrix} F_t + \begin{bmatrix} 0 \\ [illegible] \end{bmatrix}. \qquad (20)$$

The generalized coordinates, q, and their derivative, $\dot{q}$, have the states $\widetilde{x}, \widetilde{y}, \widetilde{z}, \widetilde{\phi}, \widetilde{\theta}, \widetilde{\psi}$ and $\widetilde{u}, \widetilde{v}, \widetilde{w}, \widetilde{p}, \widetilde{q}, \widetilde{r}$, respectively. If the vehicle is ordered to move along the diving plane (vertical for pure diving) relative to the inertial frame, then it is possible to obtain a simpler model for its dynamics. In this case, the restrictions are given by $\widetilde{\phi} = \widetilde{v} = \widetilde{p} = \widetilde{r} = 0$ and $\psi =$ constant, and the state reduces to $\widetilde{u}, \widetilde{w}, \widetilde{q}, \widetilde{z}, \widetilde{\theta}, \widetilde{x}$ (from Rodrigues et al., 1996). In the case of the steering (horizontal) mode, since $\widetilde{\theta} = \widetilde{w} = \widetilde{q} = 0$ and $\widetilde{u} =$ constant, the state reduces to $\widetilde{x}, \widetilde{y}, \widetilde{\phi}, \widetilde{\psi}, \widetilde{v}, \widetilde{p}, \widetilde{r}$. For a state-dependent nonlinear system, numerous examples have been found when the closed loop system is stable for every state x, but there are some points where the controllability of the system totally vanishes. From the results of Hammett et al. (1998), while the pair $[A(x), B(x)]$ is controllable for all x, System (1) is not necessarily in the weakly controllable state. The weakly controllable condition means that the system does not lose controllability for all x. Hammett et al. (1998) proved that if the rank of $B(x) = \left[\frac{0}{N}\right]$ is equal to the rank of the system, then System (1) is weakly controllable. As the rank of $B(x)$ in the dynamics of the AUV, (20), is six and the rank of the system is 12, the closed loop system may not be in the weakly controllable condition. However, if the vehicle is restricted to only the diving or steering motion, then the rank of $B(x)$ is equal to that of the system. In the following simulation, we do not consider the issue of weak controllability, but when the vehicle has restrictive motion, the controllability of the system will be enhanced.

4. Numerical simulations

With the proposed SDRE controller, we adopted the results to a numerical model of the AUV called ODIN (Choi et al., 1995). We assumed that the restoring forces (gravity and buoyancy) were negligible, and were attenuated by feed-forward compensation in advance. Parameterization of the restoring forces and reflecting these in the controller, though not particularly difficult, were not regarded for simplicity. Also, we did not consider the representation of singularities; that is, excluding pure diving motion in the physical sense. Boskovic and Krstic (1999) introduced a space transformation that eliminates an infinite number of possible orientation configurations due to a singularity.

Additional comments on implementation issues were considered. First, the needs of a full-state measurement of the controller may induce a restriction on a real application. Haessig and Friedland (1997) wrote a paper on coping with the problem by showing a method for a simultaneous state and parameter estimation. Second, Park et al. (2000) have addressed severe thruster saturation, one of the problems of AUVs in underwater operation. Also, the rate of thruster output may be limited. Mracek and Cloutier (1998) have successfully solved the situation where there exists a hard bound on the control and control rate. The

All the desired states are oriented from the inertial frame. The initial conditions are given by $q = [0.5, 1, 5, 0, 0.5, 0.7, 0]$, $\dot{q} = [0.3, 0.4, 0.5, 0, 0, 0]$, and the parameters of equation (2) are $R = 0.005I \in \Re^{8\times 8}$ and $Q = 200I \in \Re^{12\times 12}$, respectively. The simulations were carried out using the following four steps. First, the problem of regulation of station-keeping was simulated using the methodology as described above. Fig. 1 shows the global position and attitude of the AUV, which were regulated simultaneously with the proposed SDRE and conventional SDRE. Fig. 2 reveals that the Lyapunov index $V = x^T P^{-1} x$ is continuously decreasing under the given conditions. Second, we studied the performance of the proposed SDRE as a suboptimal controller by using the deviation index that indicates the relative distance from the conventional SDRE solution. A comparison is given between the conventional SDRE and the proposed SDRE with deviation compensation in Fig. 3. It shows less deviated plots than Fig. 1. The discontinuous points on Figs. 3 and 4 in the transient region show that the control input was initialized with the conventional SDRE controller whenever the deviation index H escaped a designed bound ($\Delta = 50$). There are the plots of the deviation index in Fig. 5, with (solid line) or without the switching actions. The third simulation was the tracking problem in three-dimensional space. The proposed SDRE controller can be applied as a servomechanism, in a similar manner as the LQR servomechanism (Cloutier and Zipfel, 1999). The controller was designed to follow a desired trajectory in 3-dimensional space, given as $q_d = [\sin(0.21t), \cos(0.21t), \sin(0.21t), 0, 0, 0]$. Good tracking was achieved, and the corresponding plots are shown in Fig. 6. The final problem addressed was the fault tolerance characteristics of the proposed controller. Figs. 7 and 8 show that faults on the two thrusters do not severely deteriorate the tracking performance. The faults were imposed such that the second and eighth thrusters did not work after $t > 20$ s. Various combinations of fault situations were tested, and all gave positive results. Finally we have employed the 5th order Runge-Kutta in Matlab in solving the conventional and the proposed SDRE solution, following Mracek and Cloutier (1998). We followed their approach and imposed 3 seconds to allow sufficient time for the conventional SDRE solution to converge. The proposed SDRE solution is given by direct integration with the 5th Runge-Kutta Method. At each control point, the computational burden of the conventional SDRE would be 300 times that of the proposed SDRE with 100Hz sampling time. When the state goes into the near-steady state region, the burden does not decrease in the conventional SDRE approach. In this region, the state changes slowly and eventually the proposed SDRE gives approvable optimality with simple computations.

5. Concluding remarks

We have introduced a new nonlinear feedback controller for autonomous under-

properties of an SDRE, then it is a suitable alternative candidate to a conventional SDRE-based optimal controller for a slow-varying system. In the case of a fast-varying system, we proposed a control strategy that replaces the control input with the true conventional SDRE optimal to guarantee a designed optimality. Owing to its nonlinear property and simple implementation, the proposed controller is highly recommended for higher order and slow-varying systems. We applied the proposed controller to an AUV (ODIN), a well-known nonlinear and relatively higher order system. The position/attitude regulation, tracking problems, and fault tolerance properties were simulated, and the proposed controller satisfactorily performed against the various control objectives.

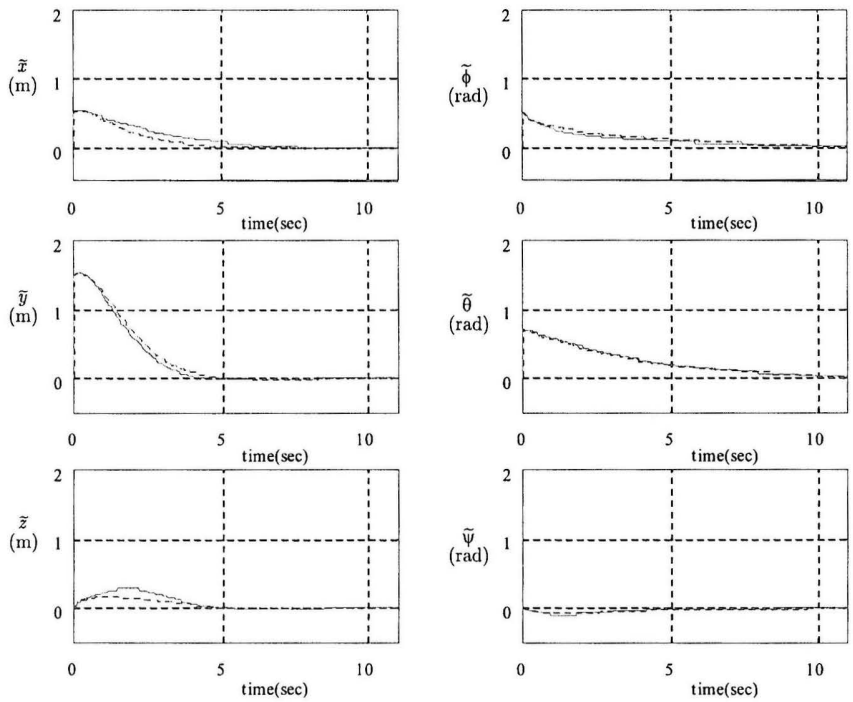

Figure 1. Position(left)/Attitude(right) with proposed SDRE and conventional SDRE (dashed line)

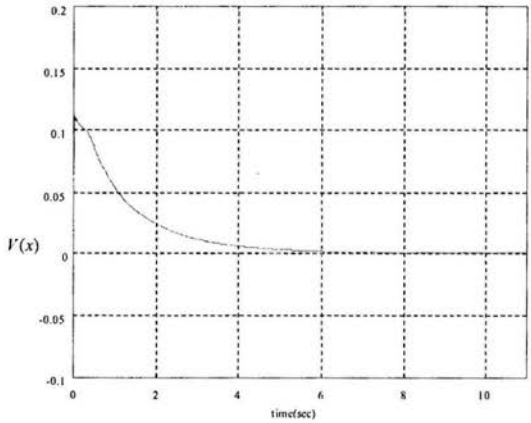

Figure 2. Lyapunov Index $V = x^T P^{-1} x$: proposed SDRE

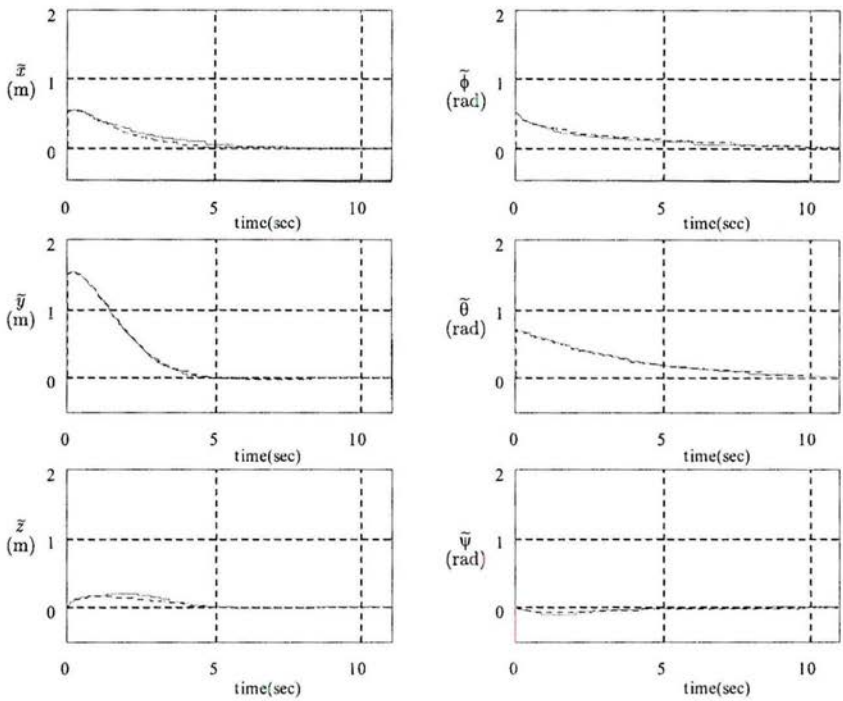

Figure 3. Position(left)/Attitude(right) with proposed SDRE with deviation compen-
sation and conventional SDRE (dashed line)

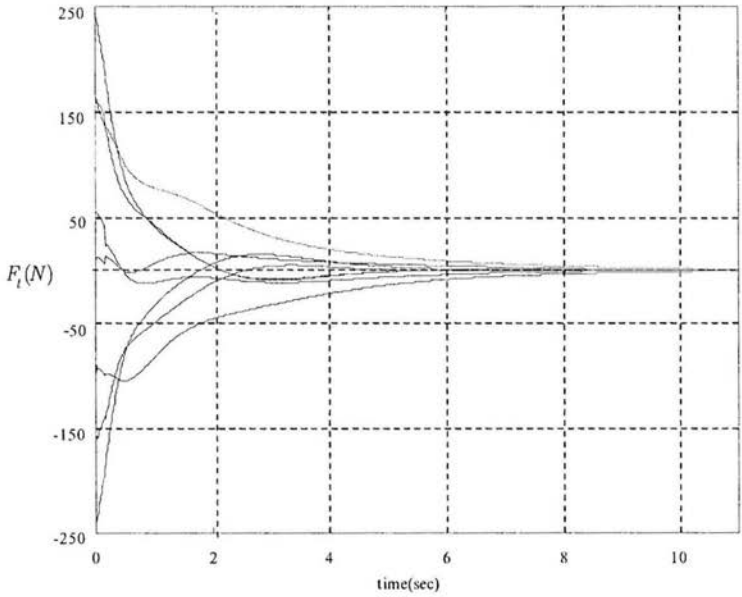

Figure 4. Control inputs $F_t \in \Re^{8\times 1}$: proposed SDRE with deviation compensation

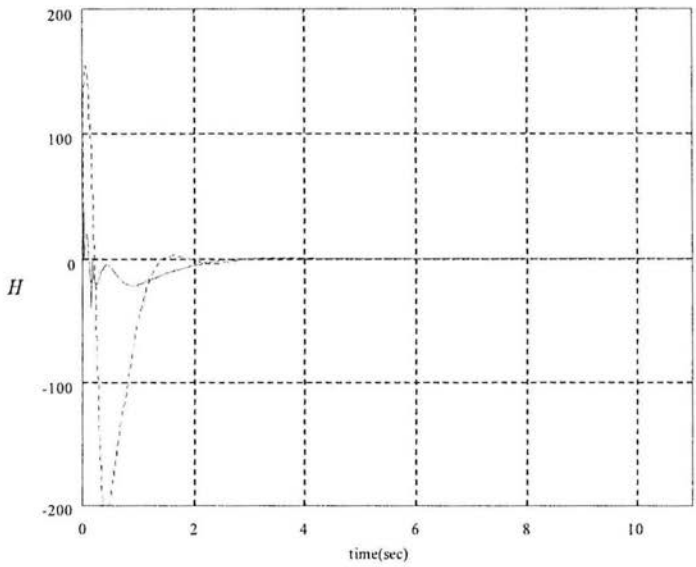

Figure 5. Difference on deviation index H - solid/broken lines are with/without

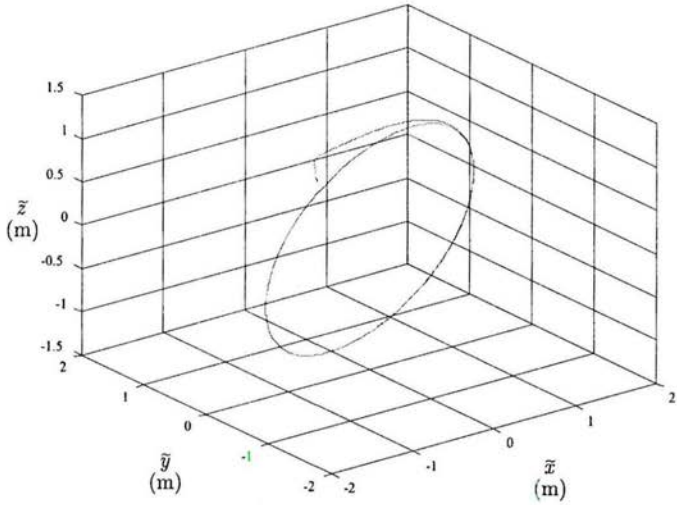

Figure 6. The tracking trajectory in 3-D $(\widetilde{x}, \widetilde{y}, \widetilde{z})$ space

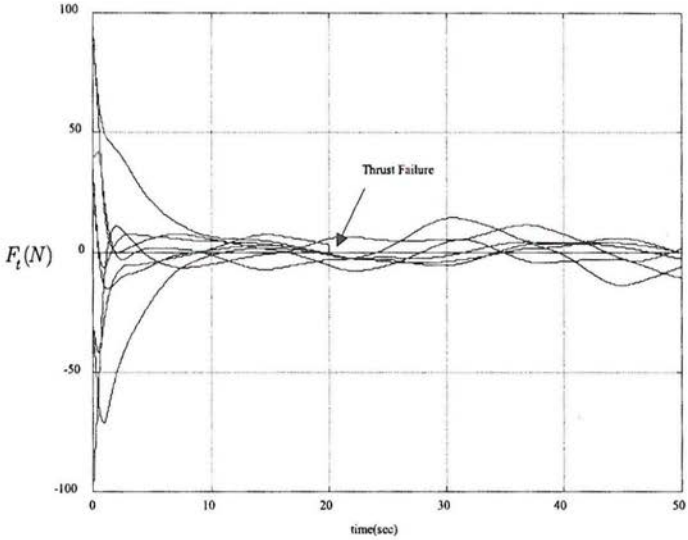

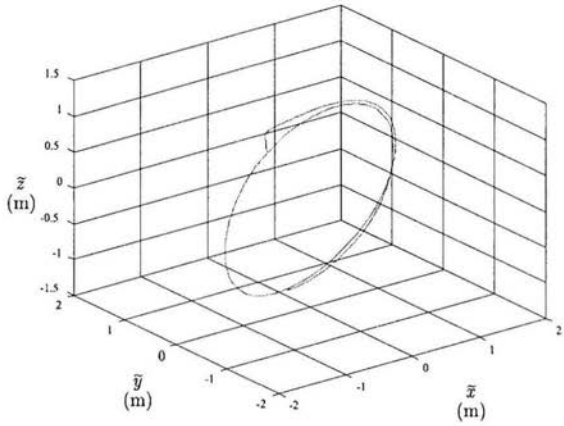

Figure 8. The tracking trajectory in 3-D space $(\widetilde{x}, \widetilde{y}, \widetilde{z})$ with thruster failure

References

ANTONELLI G., CACCAVALE F., CHIAVERINI S. and FUSCO G. (2001) A novel adaptive control law for autonomous underwater vehicles. *Proceedings of the 2001 IEEE International Conference of Robotics & Automation*, 447–452.

ANTONELLI G., CHIAVERINI S., SARKAR N. and WEST M. (1999) Adaptive control of an autonomous underwater vehicles. Experimental results on ODIN. *Computational Intelligence in Robotics and Automation, Proceedings. 1999 IEEE International Symposium*, 64–69.

BOSKOVIC D.M. and KRSTIC M. (1999) Global attitude/position regulation for underwater vehicles. *International Journal of Systems Science*, **3**, (9), 939–946.

CALLIER F.M., WINKIN J. and WILLEMS J.L. (1994) Convergence of the time-invariant Riccati differential equation and LQ-problem: mechanisms of attraction. *International Journal of Control*, **59**, (4), 983–1000.

CHOI S.K., YUH J.K. and TAKASHIGE G.Y. (1995) Development of the omni-directional intelligent navigator. *IEEE Robotics and Automation Magazine*, 44–53.

CLOUTIER J.R. and ZIPFEL P.H. (1999) Hypersonic guidance via the state-dependent Riccati equation control method. *IEEE International Conference on Control Applications*, 219–223.

FJELLSTAD O.E. and FOSSEN H.I. (1994) Position and attitude tracking of AUVs: A quaternion feedback approach. *IEEE Journal of Oceanic Engineering*, **19**, (4) 512–518.

HAESSIG D. and FRIEDLAND B. (1997) A method for simultaneous state and parameter estimation in nonlinear systems. *Proceedings of the American*

HAMMETT K.D., HALL C.D. and RIDGELY D.B. (1998) Controllability issues in nonlinear state-dependent Riccati equation control. *Journal of Guidance, Control, and Dynamics*, **21**, (5) 767–773.

HAYASE M., YAMAZAKI Y. and RIJANTO E. (2000) Nonlinear optimal control: Principle of local optimality. *Industrial Technology 2000. Proceedings of IEEE International Conference*, **2**, 202–205.

HEALEY A.J. and LIENARD D. (1993) Multivariable sliding-mode control for autonomous diving and steering of unmanned underwater vehicles. *IEEE Journal of Oceanic Engineering*, **18**, (3) 327–339.

HULL R.A., CLOUTIER J.R., MRACEK C.P. and STANSBERY D.T. (1998) State dependent Riccati equation solution of the toy nonlinear optimal control problem. *Proceedings of the American Control Conference*, 1658–1663.

ISHII K., FUJII T. and URA T. (1998) Neural network system for on-line controller adaptation and its application to underwater robot. *Proceedings of 1998 IEEE International Conference on Robotics and Automation*, 756–761.

JAZWINSKI A.H. (1965) Quadratic and higher-order feedback gains for control of nonlinear systems. *AIAA Journal*, **3**, 925–935.

KATEBI M.R. and GRIMBLE M.J. (1999) Integrated control, guidance and diagnosis for reconfigurable autonomous underwater vehicle control. *International Journal of Systems Science*, **30**, (9), 1021–1032.

LANGSON W. and ALLEYNE A. (1997) Infinite horizon optimal control of a class of nonlinear systems. *Proceedings of the American Control Conference*, 3017–3022.

LANGSON W. and ALLEYNE A. (1999) A stability result with application to nonlinear regulation: Theory and experiments. *Proceedings of the American Control Conference*, 3051–3056.

MCCAFFREY D. and BANKS S.P. (2001) Lagrangian manifolds and asymptotically optimal stabilizing feedback control. *Systems & Control Letters*, **43**, (3) 219–224.

MCLAIN T.W. and BEARD R.W. (1998) Successive galerkin approximations to the nonlinear optimal control of an underwater robotic vehicle. *Proceedings of the 1998 IEEE International conference on Robotics and Automation*, 762–767.

MRACEK C.P. and CLOUTIER J.R. (1998) Control designs for the nonlinear benchmark problem via the state-dependent Riccati equation method. *International Journal of Robust and Nonlinear Control*, **8**, 401–433.

PARK J.H., CHUNG W.K. and YUH J.K. (2000) Nonlinear Optimal PID Control of autonomous underwater vehicles. *Underwater Technology, 2000. UT 00. Proceedings of the 2000 International Symposium*, 193–198.

PODDER T.K. and SARKAR N. (1999) Fault tolerant decomposition of thruster forces of an autonomous underwater vehicle. *Proceedings of the 1999 IEEE*

REID W.T. (1970) Monotoneity properties of solutions of Hermitian Riccati matrix differential equations. *SIAM Journal of Mathematical Analysis*, **1**, (2) 195–213.

RODRIGUES L., TAVARES P. and PRADO M. (1996) Sliding mode control of an AUV in the diving and steering planes. *Oceans '96, MTS/ IEEE Prospects for the 21st Century. Conference Proceedings*, **2**, 576–583.

RUSNAK I. (1998) Closed-form solution for the Kalman filter gains of time-varying systems. *IEEE Transaction on Aerospace and Electronic systems*, **34**, (2) 635–639.

SERRANI A. and ZANOLI S.M. (1998) Designing guidance and control schemes for AUVs using an integrated simulation environment. *Proceedings of the 1998 IEEE International Conference on Control Applications*, 1079–1083.

SHAMMA J.S. and CLOUTIER J.R. (2001) Existence of SDRE Stabilizing Feedback. *Proceedings of the American Control Conference 2001*, 4253–4257.

SILVERMAN L.M. and ANDERSON B.D.O. (1968) Controllability, observability and stability of linear systems. *SIAM Journal of Control*, **6**, (1) 121–130.

WONHAM W.M. (1968) On a matrix Riccati equation of stochastic control. *SIAM Journal of Control*, **6**, (4) 681–697.

YOERGER D.R. and SLOTINE J.J.E. (1990) Robust trajectory control of underwater vehicles. *IEEE Journal of Oceanic Engineering*, **10**, (4) 462–470.

YUH J.K. (1994) Learning control of underwater robotic vehicles. *IEEE control System Magazine*, **15**, (2) 39–46.

YUH J.K. (1995) A learning control system for unmanned underwater vehicles. *Oceans '95. MTS/IEEE. Challenges of our Changing Global Environment. Conference Proceedings*, **2**, 1029–1032.